DATA SHEET

BFG135
NPN 7GHz wideband transistor

Product specification
File under discrete semiconductors, SC14

1995 Sep 13

Philips
Semiconductors

PHILIPS

NPN 7GHz wideband transistor BFG135

DESCRIPTION

NPN silicon planar epitaxial transistor in a plastic SOT223 envelope, intended for wideband amplifier applications. The small emitter structures, with integrated emitter-ballasting resistors, ensure high output voltage capabilities at a low distortion level.

The distribution of the active areas across the surface of the device gives an excellent temperature profile.

PINNING

PIN	DESCRIPTION
1	emitter
2	base
3	emitter
4	collector

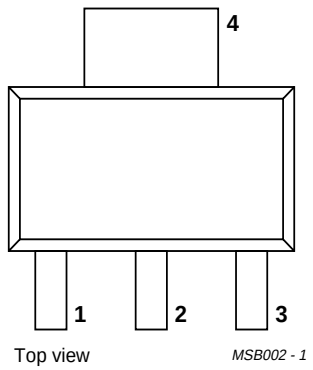

Fig.1 SOT223.

QUICK REFERENCE DATA

SYMBOL	PARAMETER	CONDITIONS	MIN.	TYP.	MAX.	UNIT
V_{CBO}	collector-base voltage	open emitter	–	–	25	V
V_{CEO}	collector-emitter voltage	open base	–	–	15	V
I_C	DC collector current		–	–	150	mA
P_{tot}	total power dissipation	up to T_s = 145 °C (note 1)	–	–	1	W
h_{FE}	DC current gain	I_C = 100 mA; V_{CE} = 10 V; T_j = 25 °C	80	130	–	
f_T	transition frequency	I_C = 100 mA; V_{CE} = 10 V; f = 1 GHz; T_{amb} = 25 °C	–	7	–	GHz
G_{UM}	maximum unilateral power gain	I_C = 100 mA; V_{CE} = 10 V; f = 500 MHz; T_{amb} = 25 °C	–	16	–	dB
		I_C = 100 mA; V_{CE} = 10 V; f = 800 MHz; T_{amb} = 25 °C	–	12	–	dB
V_o	output voltage	d_{im} = –60 dB; I_C = 100 mA; V_{CE} = 10 V; R_L = 75 Ω; T_{amb} = 25 °C; $f_{(p+q-r)}$ = 793.25 MHz	–	850	–	mV

LIMITING VALUES

In accordance with the Absolute Maximum System (IEC 134).

SYMBOL	PARAMETER	CONDITIONS	MIN.	MAX.	UNIT
V_{CBO}	collector-base voltage	open emitter	–	25	V
V_{CEO}	collector-emitter voltage	open base	–	15	V
V_{EBO}	emitter-base voltage	open collector	–	2	V
I_C	DC collector current		–	150	mA
P_{tot}	total power dissipation	up to T_s = 145 °C (note 1)	–	1	W
T_{stg}	storage temperature		–65	150	°C
T_j	junction temperature		–	175	°C

Note

1. T_s is the temperature at the soldering point of the collector tab.

THERMAL CHARACTERISTICS

SYMBOL	PARAMETER	CONDITIONS	THERMAL RESISTANCE
$R_{th\ j\text{-}s}$	thermal resistance from junction to soldering point	up to T_s = 145 °C (note 1)	30 K/W

Note

1. T_s is the temperature at the soldering point of the collector tab.

CHARACTERISTICS

T_j = 25 °C unless otherwise specified.

SYMBOL	PARAMETER	CONDITIONS	MIN.	TYP.	MAX.	UNIT
I_{CBO}	collector cut-off current	I_E = 0; V_{CB} = 10 V	–	–	1	μA
h_{FE}	DC current gain	I_C = 100 mA; V_{CE} = 10 V	80	130	–	
C_c	collector capacitance	$I_E = i_e$ = 0; V_{CB} = 10 V; f = 1 MHz	–	2	–	pF
C_e	emitter capacitance	$I_C = i_c$ = 0; V_{EB} = 0.5 V; f = 1 MHz	–	7	–	pF
C_{re}	feedback capacitance	I_C = 0; V_{CE} = 10 V; f = 1 MHz	–	1.2	–	pF
f_T	transition frequency	I_C = 100 mA; V_{CE} = 10 V; f = 1 GHz; T_{amb} = 25 °C	–	7	–	GHz
G_{UM}	maximum unilateral power gain	I_C = 100 mA; V_{CE} = 10 V; f = 500 MHz; T_{amb} = 25 °C	–	16	–	dB
		I_C = 100 mA; V_{CE} = 10 V; f = 800 MHz; T_{amb} = 25 °C	–	12	–	dB
V_o	output voltage	note 1	–	900	–	mV
		note 2	–	850	–	mV
d_2	second order intermodulation distortion	I_C = 90 mA; V_{CE} = 10 V; V_O = 50 dBmV; T_{amb} = 25 °C; $f_{(p+q)}$ = 450 MHz; f_p = 50 MHz; f_q = 400 MHz	–	–58	–	dB
		I_C = 90 mA; V_{CE} = 10 V; V_O = 50 dBmV; T_{amb} = 25 °C; $f_{(p+q)}$ = 810 MHz; f_p = 250 MHz; f_q = 560 MHz	–	–53	–	dB

Notes

1. d_{im} = –60 dB (DIN 45004B); I_C = 100 mA; V_{CE} = 10 V; R_L = 75 Ω; T_{amb} = 25 °C;
   $V_p = V_o$ at d_{im} = –60 dB; f_p = 445.25 MHz;
   $V_q = V_o$ –6 dB; f_q = 453.25 MHz;
   $V_r = V_o$ –6 dB; f_r = 455.25 MHz;
   measured at $f_{(p+q-r)}$ = 443.25 MHz.
2. d_{im} = –60 dB (DIN 45004B); I_C = 100 mA; V_{CE} = 10 V; R_L = 75 Ω; T_{amb} = 25 °C;
   $V_p = V_o$ at d_{im} = –60 dB; f_p = 795.25 MHz;
   $V_q = V_o$ –6 dB; f_q = 803.25 MHz;
   $V_r = V_o$ –6 dB; f_r = 805.25 MHz;
   measured at $f_{(p+q-r)}$ = 793.25 MHz.

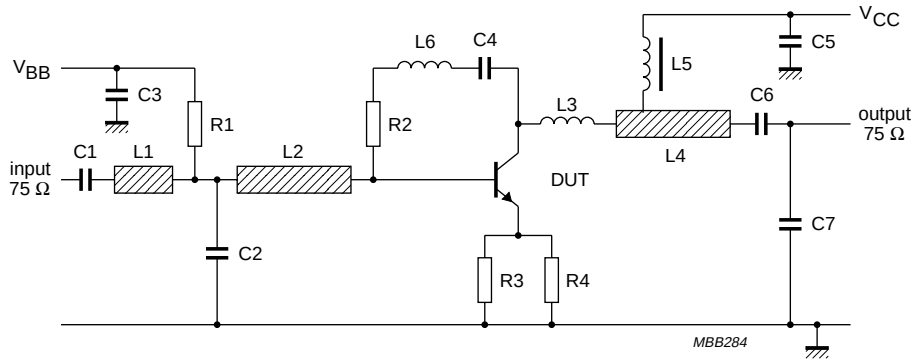

Fig.2 Intermodulation distortion and second order intermodulation distortion test circuit.

List of components (see test circuit)

DESIGNATION	DESCRIPTION	VALUE	UNIT	DIMENSIONS	CATALOGUE NO.
C1, C3, C5, C6	multilayer ceramic capacitor	10	nF		2222 590 08627
C2, C7	multilayer ceramic capacitor	1	pF		2222 851 12108
C4 (note 1)	miniature ceramic plate capacitor	10	nF		2222 629 08103
L1	microstripline	75	Ω	length 7 mm; width 2.5 mm	
L2	microstripline	75	Ω	length 22mm; width 2.5 mm	
L3 (note 1)	1.5 turns 0.4 mm copper wire			int. dia. 3 mm; winding pitch 1 mm	
L4	microstripline	75	Ω	length 19 mm; width 2.5 mm	
L5	Ferroxcube choke	5	μH		3122 108 20153
L6 (note 1)	0.4 mm copper wire	≈25	nH	length 30 mm	
R1	metal film resistor	10	kΩ		2322 180 73103
R2 (note 1)	metal film resistor	200	Ω		2322 180 73201
R3, R4	metal film resistor	27	Ω		2322 180 73279

Note

1. Components C4, L3, L6 and R2 are mounted on the underside of the PCB.
   The circuit is constructed on a double copper-clad printed circuit board with PTFE dielectric (ε_r = 2.2); thickness $^1/_{16}$ inch; thickness of copper sheet $^1/_{32}$ inch.

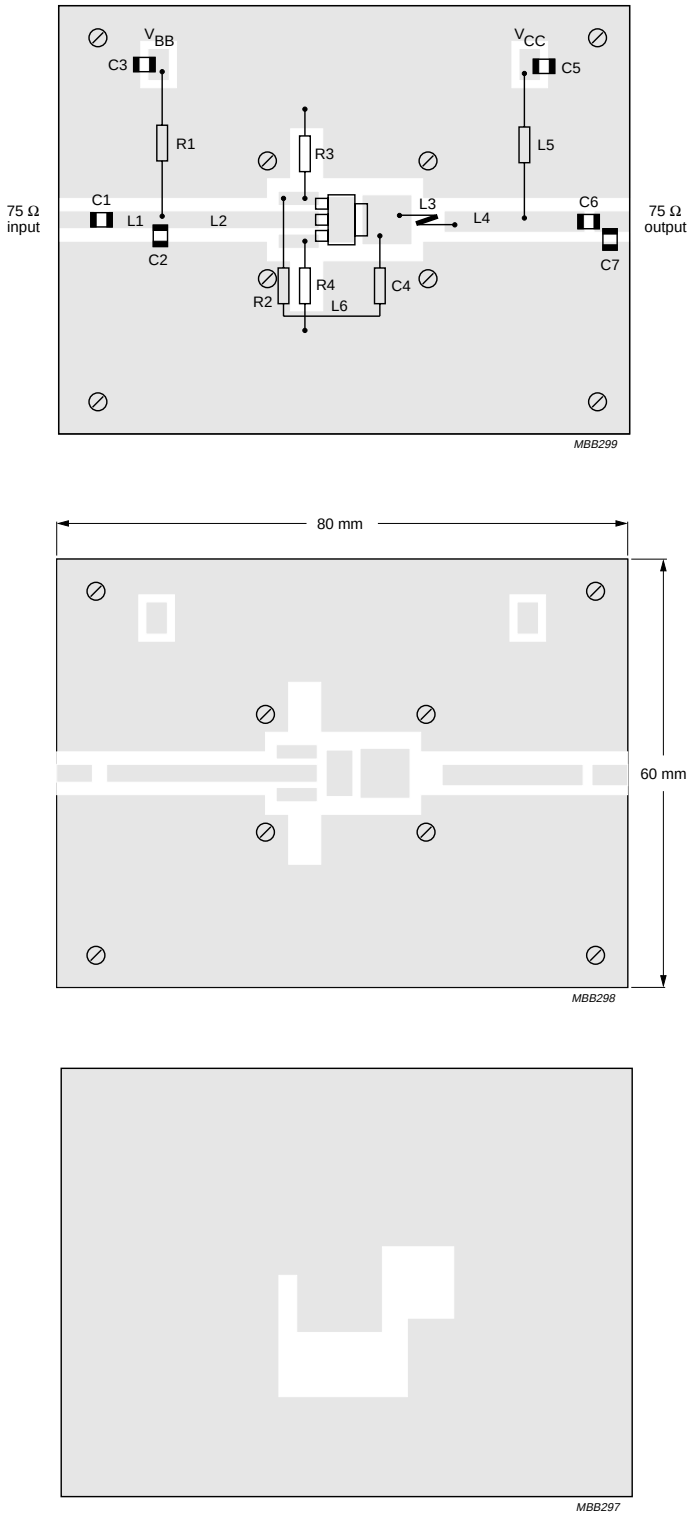

Fig.3 Intermodulation distortion test printed-circuit board.

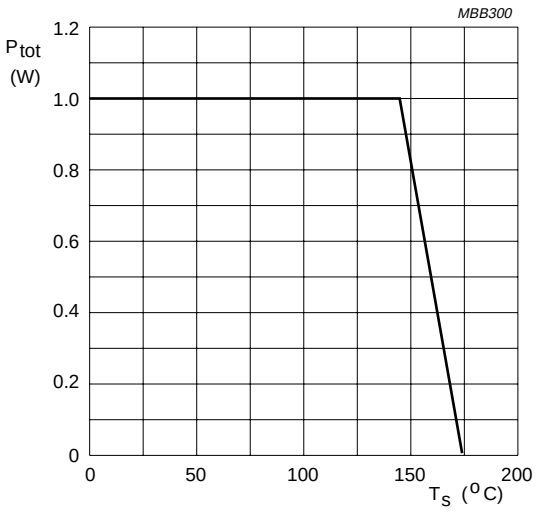

Fig.4 Power derating curve.

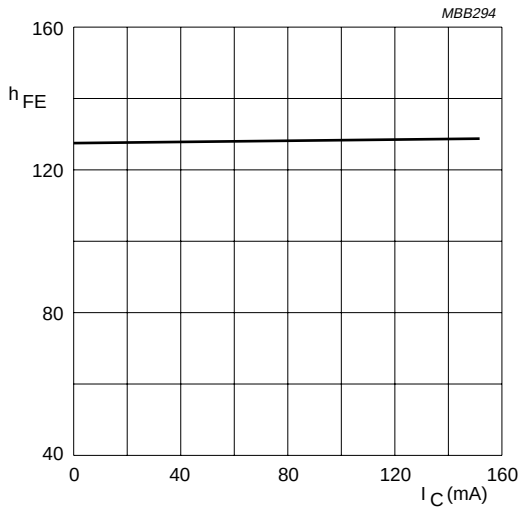

V_{CE} = 10 V; T_j = 25 °C.

Fig.5 DC current gain as a function of collector current.

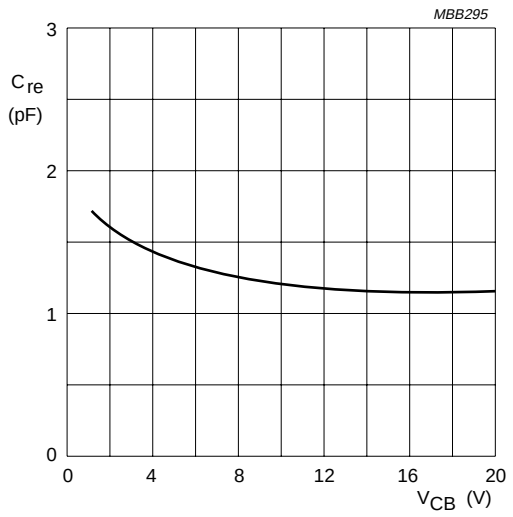

I_E = 0; f = 1 MHz; T_j = 25 °C.

Fig.6 Feedback capacitance as a function of collector-base voltage.

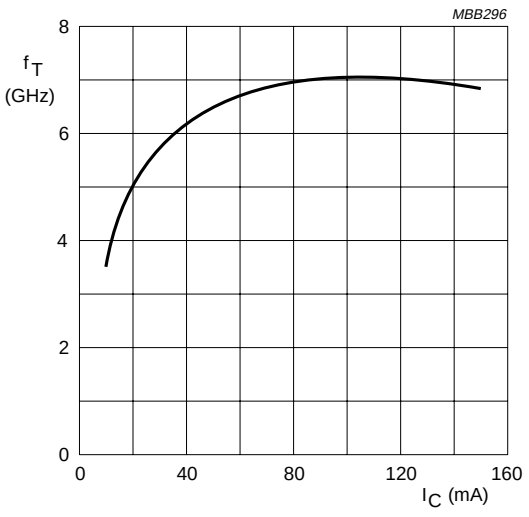

V_{CE} = 10 V; f = 1 GHz; T_{amb} = 25 °C.

Fig.7 Transition frequency as a function of collector current.

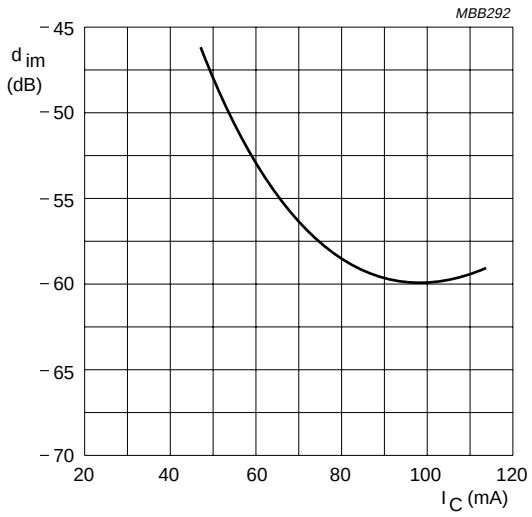

V_{CE} = 10 V; V_o = 900 mV; T_{amb} = 25 °C;
$f_{(p+q-r)}$ = 443.25 MHz.

Fig.8 Intermodulation distortion as a function of collector current.

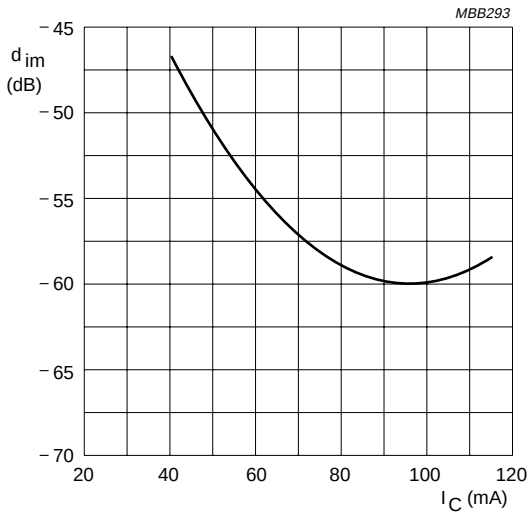

V_{CE} = 10 V; V_o = 850 mV; T_{amb} = 25 °C;
$f_{(p+q-r)}$ = 793.25 MHz.

Fig.9 Intermodulation distortion as a function of collector current.

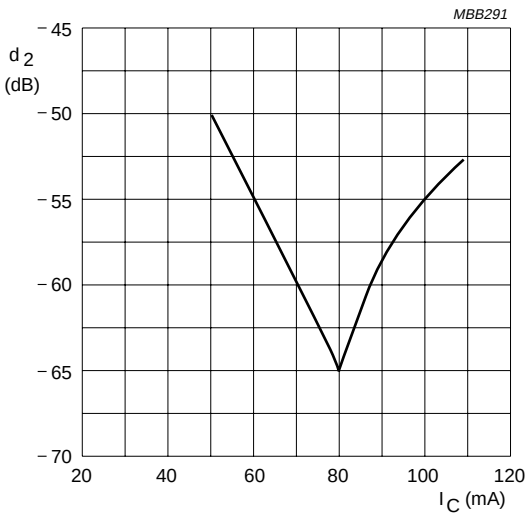

V_{CE} = 10 V; V_o = 50 dBmV; T_{amb} = 25 °C;
$f_{(p+q)}$ = 450 MHz.

Fig.10 Second order intermodulation distortion as a function of collector current.

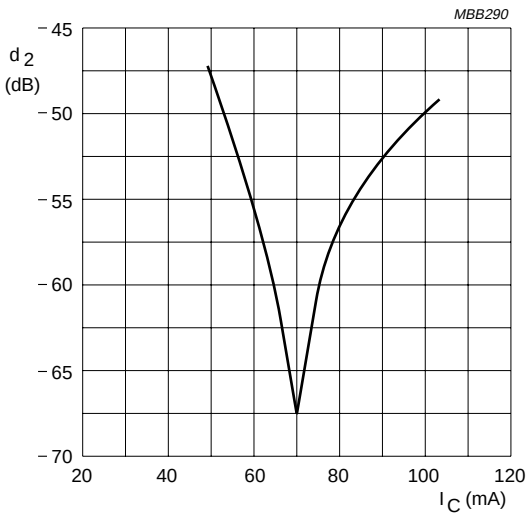

V_{CE} = 10 V; V_o = 50 dBmV; T_{amb} = 25 °C
$f_{(p+q)}$ = 810 MHz.

Fig.11 Second order intermodulation distortion as a function of collector current.

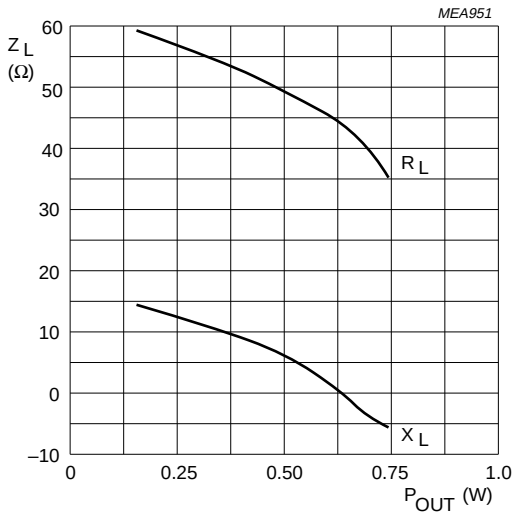

V_{CE} = 7.5 V; f = 900 MHz.

Fig.12 Load impedance as a function of output power.

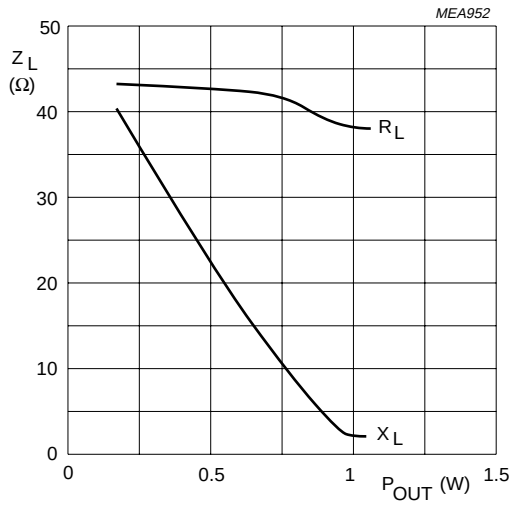

V_{CE} = 10 V; f = 900 MHz.

Fig.13 Load impedance as a function of output power.

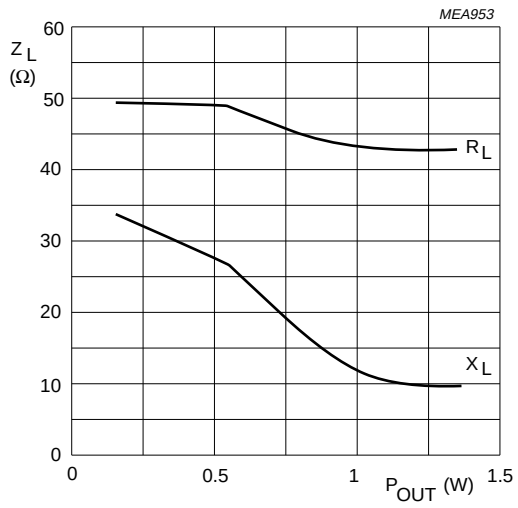

V_{CE} = 12.5 V; f = 900 MHz.

Fig.14 Load impedance as a function of output power.

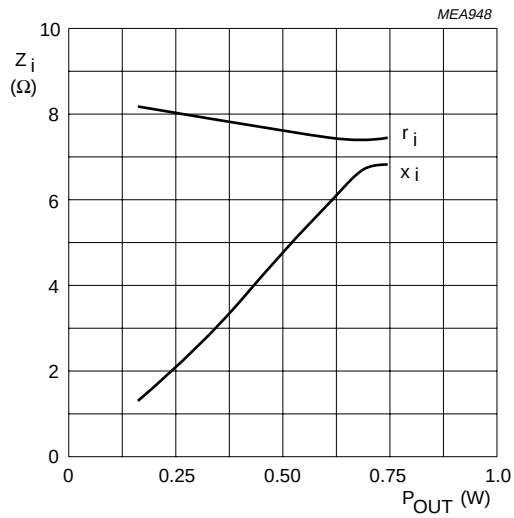

V_{CE} = 7.5 V; f = 900 MHz.

Fig.15 Input impedance as a function of output power.

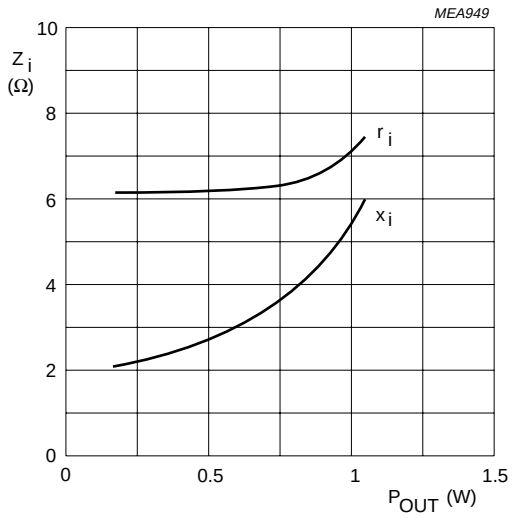

V_{CE} = 10 V; f = 900 MHz.

Fig.16 Input impedance as a function of output power.

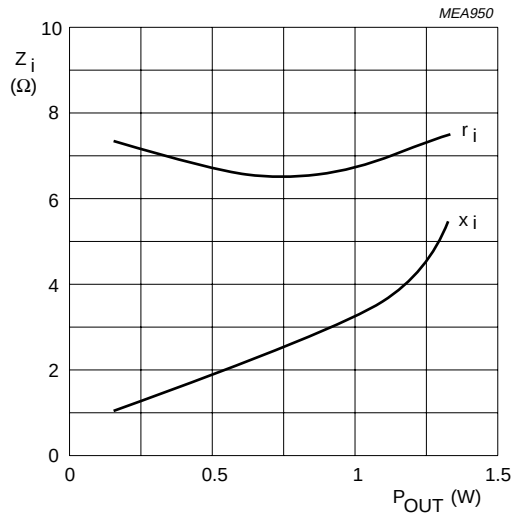

V_{CE} = 12.5 V; f = 900 MHz.

Fig.17 Input impedance as a function of output power.

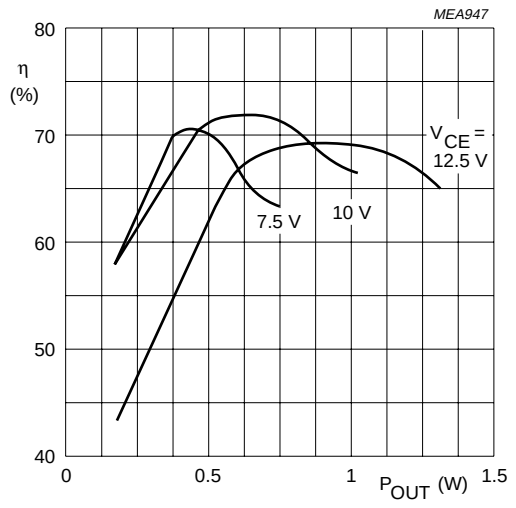

f = 900 MHz.

Fig.18 Efficiency as a function of output power.

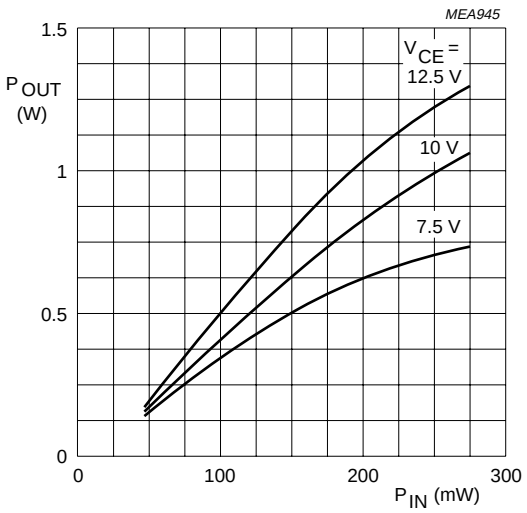

f = 900 MHz.

Fig.19 Output power as a function of input power.

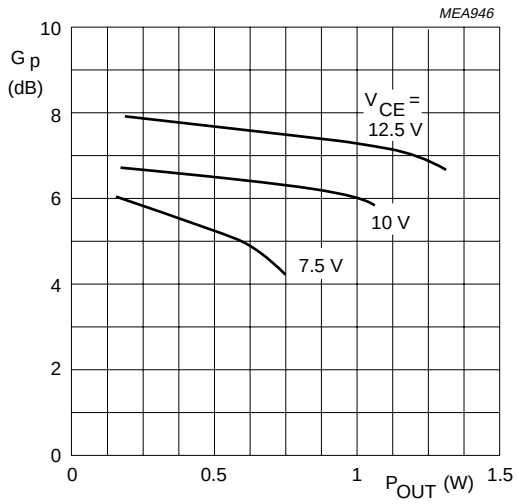

f = 900 MHz.

Fig.20 Power gain as a function of output power.

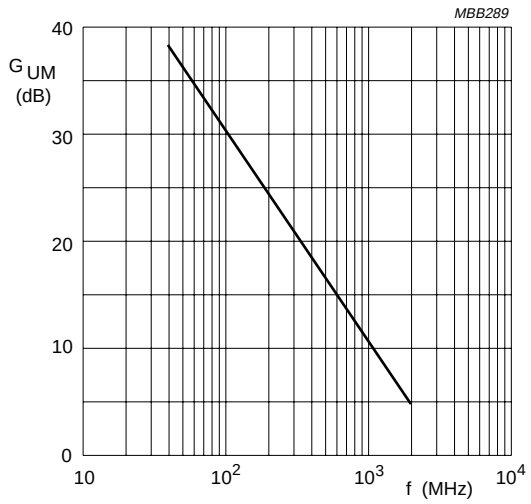

I_C = 100 mA; V_{CE} = 10 V; T_{amb} = 25 °C.

Fig.21 Maximum unilateral power gain as a function of frequency.

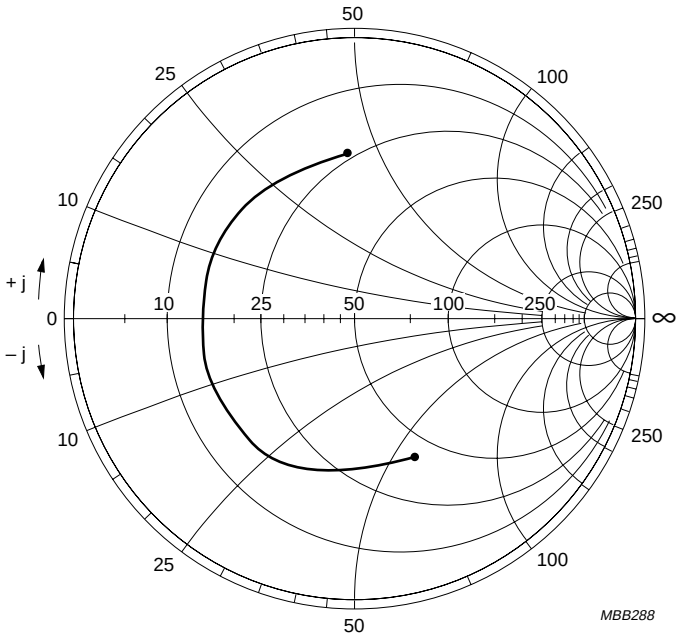

I_C = 100 mA; V_{CE} = 10 V; T_{amb} = 25 °C; Z_o = 50 Ω..

Fig.22 Common emitter input reflection coefficient (S_{11}).

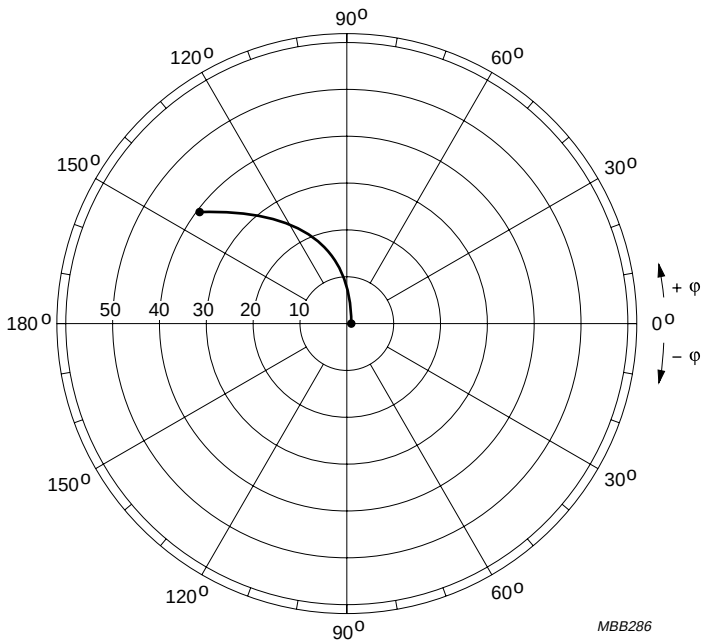

I_C = 100 mA; V_{CE} = 10 V; T_{amb} = 25 °C.

Fig.23 Common emitter forward transmission coefficient (S_{21}).

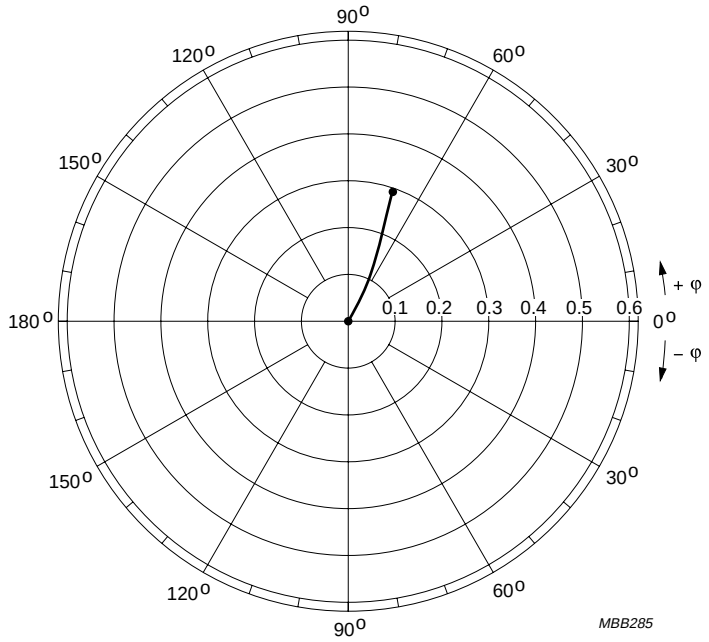

I_C = 100 mA; V_{CE} = 10 V; T_{amb} = 25 °C.

Fig.24 Common emitter reverse transmission coefficient (S_{12}).

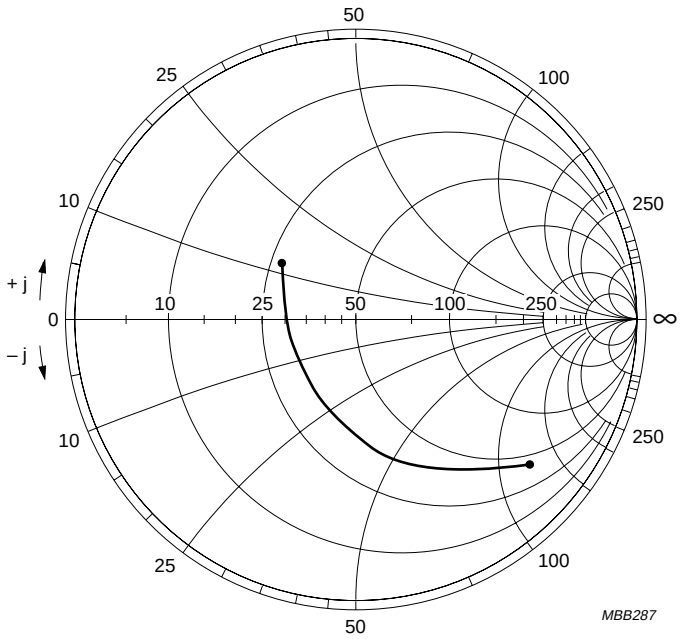

I_C = 100 mA; V_{CE} = 10 V; T_{amb} = 25 °C; Z_o = 50 Ω..

Fig.25 Common emitter output reflection coefficient (S_{22}).