SP-97
Aluminium milled box

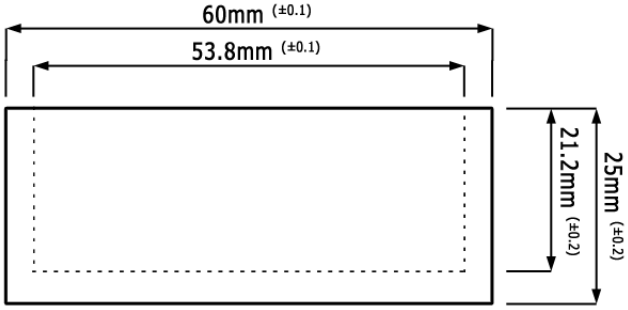

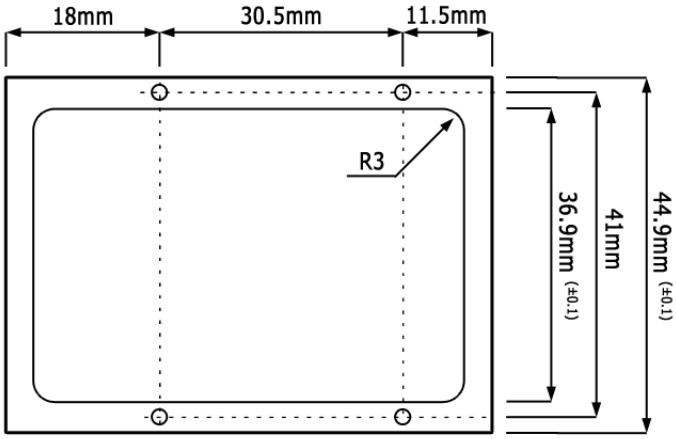

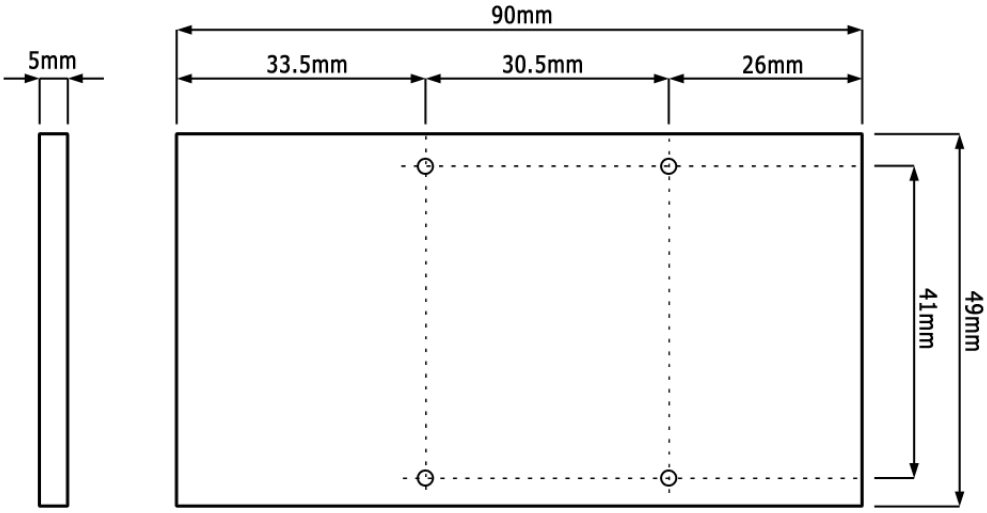

R.F. elettronica di Rota Fanco
Via Dante, 5
20030 Senago (MI)
Italy

Tel.: +39 (0)2 99487515
Fax: +39 (0)2 99489276
E-mail: info@rfmicrowave.it
Web: www.rf-microwave.com