Tuner Diode
Silicon Epitaxial Planar Capacitance Diode with very wide effective capacitance variation for tuning the whole range of VHF CTV tuners.

These diodes are available as singles or as matched sets of two or more units according to the tracking condition described below.

These diodes are delivered taped.
Details see "Taping".

These diodes are also available with straight leads. Overall length 14 mm (only bulk packaging).

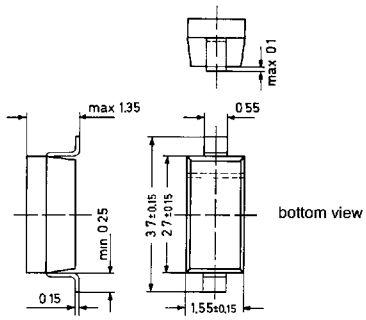

Plastic Package ≈ 60 A2
according to DIN IEC 47(CO)718

Weight approx. 0.013 g
Dimension in mm

Absolute Maximum Ratings

	Symbol	Value	Unit
Reverse Voltage	V_R	32	V
Junction Temperature	T_j	125	°C
Storage Temperature Range	T_S	−55 to +125	°C

Characteristics at T_j = 25 °C

	Symbol	Min.	Typ.	Max.	Unit
Capacitance at V_R = 28 V at V_R = 25 V at V_R = 2 V	 C_{tot} C_{tot} C_{tot}	 2.38 2.68 26.9	 – – –	 2.93 3.12 33.1	 pF pF pF
Effective Capacitance Ratio at V_R = 1 to 28 V at V_R = 2 to 25 V	 $\frac{C_{tot}(1\,V)}{C_{tot}(28\,V)}$ $\frac{C_{tot}(2\,V)}{C_{tot}(25\,V)}$	 12 10	 – –	 – 11	 – –
Series Resistance at f = 470 MHz, C_{tot} = 25 pF	r_s	–	–	0.8	Ω
Series Inductance	L_s	–	2.5	–	nH
Leakage Current at V_R = 30 V	I_R	–	–	10	nA
Reverse Breakdown Voltage at I_R = 100 μA	$V_{(BR)R}$	32	–	–	V
For any two of six consecutive diodes in the carrier tape the maximum capacitance deviation in the reverse bias voltage range of V_R = 0.5 V to V_R = 28 V is 2.5 %.					

Capacitance versus reverse voltage

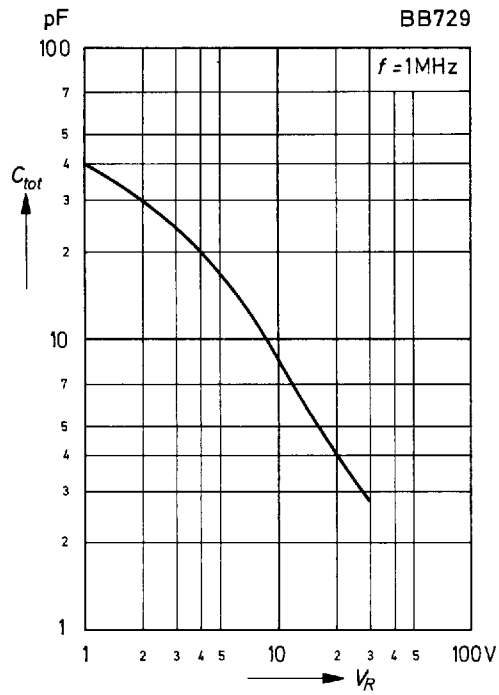

Leakage current versus reverse voltage

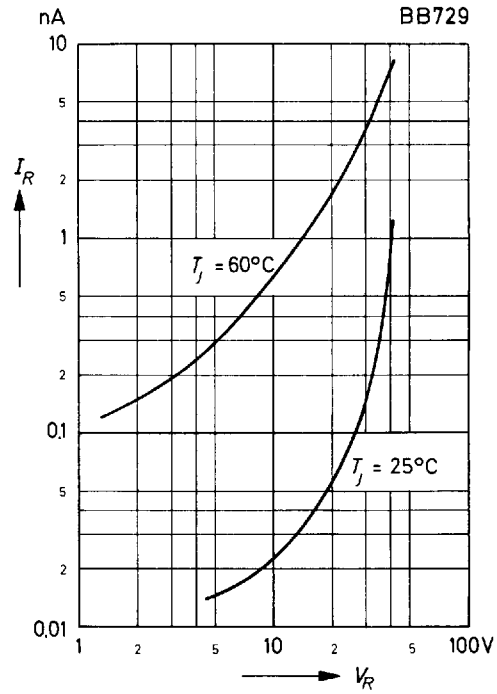

Relative capacitance versus junction temperature

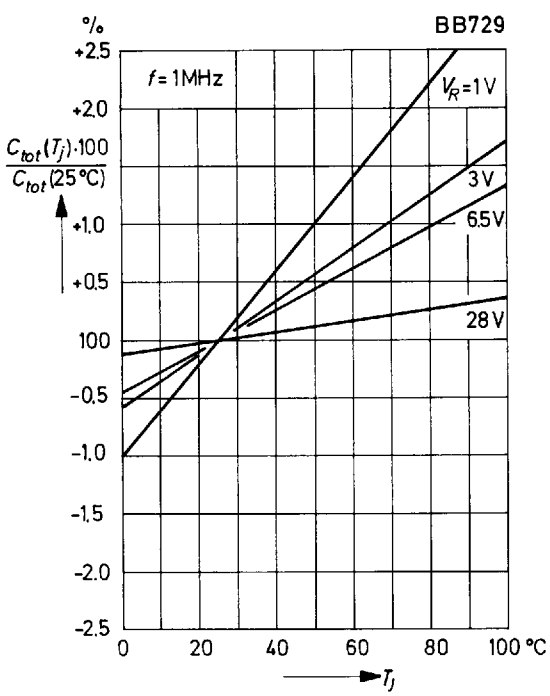

Q-Factor versus frequency