# N Bulkhead Jack

FRONT MOUNT

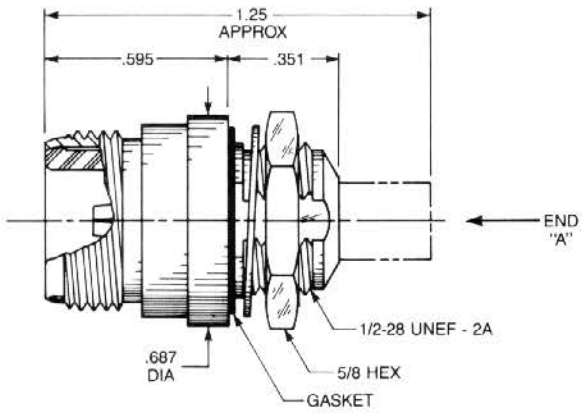


| END "A" CONFIGURATION | | |
|---|---|---|
| | SMC JACK | 50-075-6701 |
| | | |
| | | |
| | | |
| | | |
| | | |
| | | |
| | | |