REVISIONS		
ISS	ZONE	DESCRIPTION\PER REQUEST\DATE

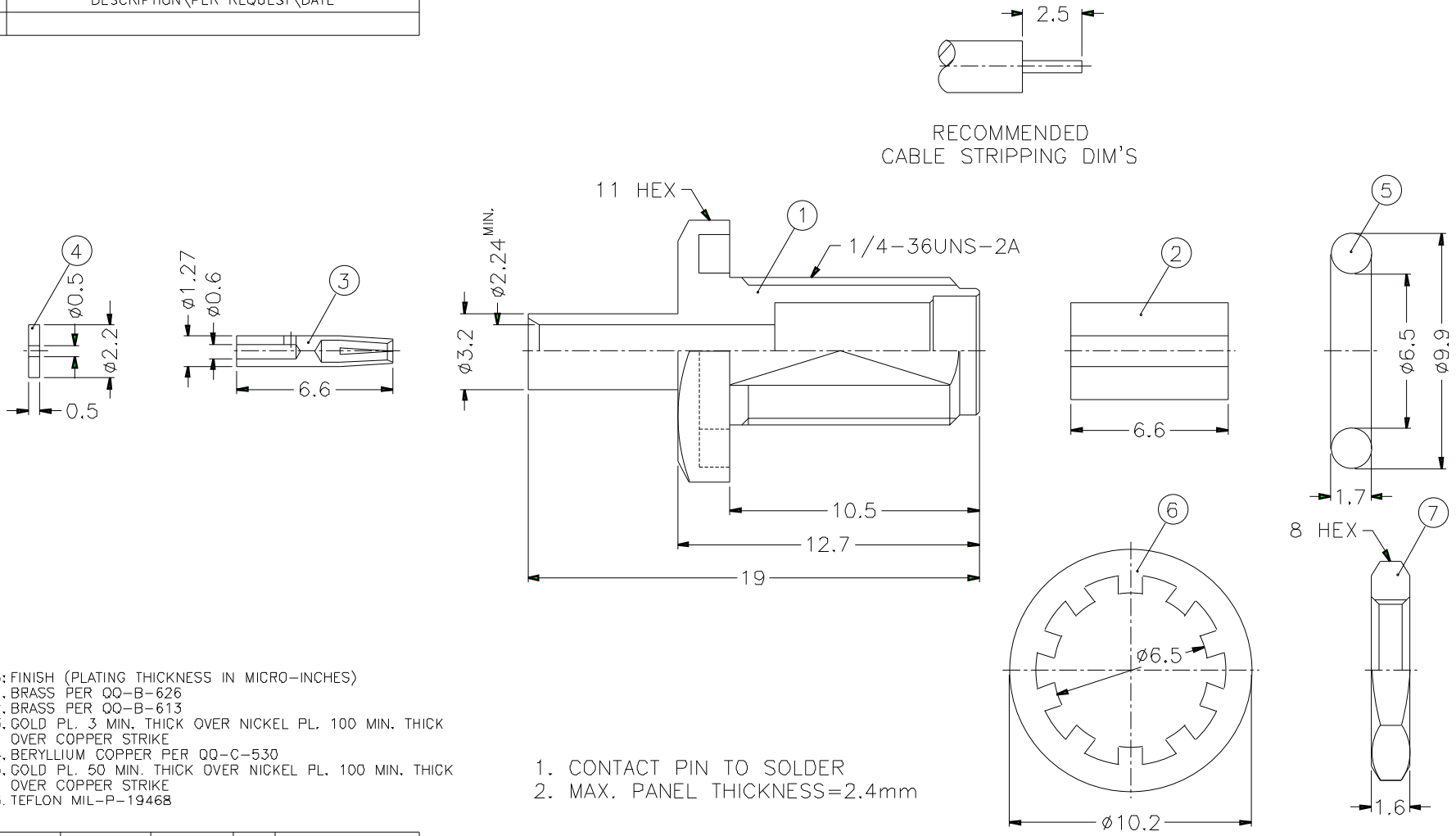

NOTES: FINISH (PLATING THICKNESS IN MICRO-INCHES)
1. BRASS PER QQ-B-626
2. BRASS PER QQ-B-613
3. GOLD PL. 3 MIN. THICK OVER NICKEL PL. 100 MIN. THICK OVER COPPER STRIKE
4. BERYLLIUM COPPER PER QQ-C-530
5. GOLD PL. 50 MIN. THICK OVER NICKEL PL. 100 MIN. THICK OVER COPPER STRIKE
6. TEFLON MIL-P-19468

1. CONTACT PIN TO SOLDER
2. MAX. PANEL THICKNESS=2.4mm

NO.	DESCRIPTION	MATERIAL	FINISH	Q'TY	DRAWING NO.
7	HEX NUT	NOTE 1	NOTE 3	1	HN8-1/4-36X16
6	LOCK WASHER	NOTE 2	NOTE 3	1	LW-102/65X05
5	GASKET	SILICONE	RED	1	GS-99/65XD17
4	INSULATOR	NOTE 6	NATURAL	1	SMA1181A2-5T-50
3	CONTACT PIN	NOTE 4	NOTE 5	1	SMA7081-3-127/06-B
2	INSULATOR	NOTE 6	NATURAL	1	SMA7081-2T-50
1	BODY	NOTE 1	NOTE 3	1	SMA7481-1-32/224-C

DIMENSIONS ARE IN MILLIMETERS

UNLESS OTHERWISE SPECIFIED TOLERANCES
0.5-6 = ±0.2
6-30 = ±0.4
30-120 = ±0.6
120-315 = ±1
315-1000 = ±1.6
1000-2000 = ±2.4

SCALE 4/1 | ISSUE A

PART NO. SMA6481A2-3GT50G-11-50

APPROVED DATE 10-11-01'

CHECKED DATE 10-11-01'

DRAWN DATE 10-11-01'

FILE NO.

Amphenol

TITLE SMA DIRECT SOLDER BULKHEAD JACK (FOR .085", .086")

DRAWING NO. KJ-SMA6481A2-3GT50G-.085-50

ITEM NO.